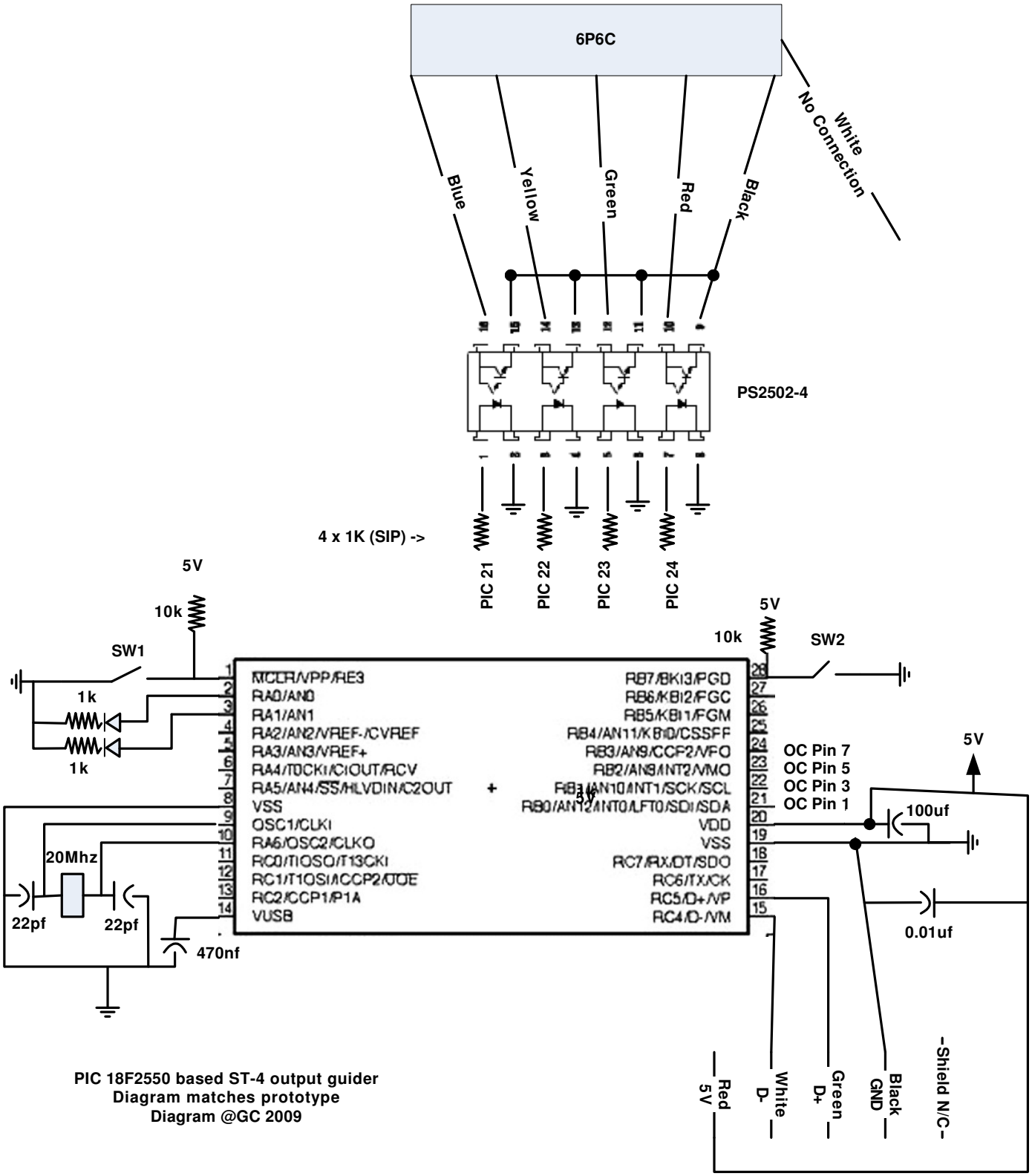
6P6C
Blue
Yellow
Green
Red
Black
White
No Connection
PS2502-4
4 x 1K (SIP) ->
PIC 21
PIC 22
PIC 23
PIC 24
5V
10k
SW1
1k
1k
20Mhz
22pf
22pf
470nf
MCLR/VPP/RE3
RA0/AN0
RA1/AN1
RA2/AN2/VREF-/CVREF
RA3/AN3/VREF+
RA4/T0CKI/C1OUT/RCV
RA5/AN4/SS/HLVDIN/C2OUT
VSS
OSC1/CLKI
RA6/OSC2/CLKO
RC0/T1OSO/T13CKI
RC1/T1OSI/CCP2/UOE
RC2/CCP1/P1A
VUSB
RB7/BKI3/PGD
RB6/KBI2/PGC
RB5/KBI1/PGM
RB4/AN11/KBI0/CSSPP
RB3/AN9/CCP2/VPO
RB2/AN8/INT2/VMO
RB1/AN10/INT1/SCK/SCL
RB0/AN12/INT0/FLT0/SDI/SDA
VDD
VSS
RC7/RX/DT/SDO
RC6/TX/CK
RC5/D+/VP
RC4/D-/VM
5V
10k
SW2
OC Pin 7
OC Pin 5
OC Pin 3
OC Pin 1
5V
100uf
0.01uf
Red 5V
White D-
Green D+
Black GND
-Shield N/C-
PIC 18F2550 based ST-4 output guider
Diagram matches prototype
Diagram @GC 2009
5 x 0.1 center pins
Attach to SIIG CB-BR0311-S1
Or similar